Energy, Mines and Resources Canada

Énergie, Mines et Ressources Canada

CANMET

Canada Centre for Mineral and Energy Technology

Centre canadien de la technologie des minéraux et de l'énergie

Mining Research Laboratories

Laboratoires de recherche minière

Canada

SAP3D DOCUMENT – A 3-D LINEAR ELASTIC FINITE ELEMENT PROGRAM (CRAY-1S VERSION)

N.A. Toews, Y.S. Yu, and A.S. Wong

May 1989 MRL 89-07 (TR)

This document is an unedited interim report prepared primarily for discussion and internal reporting purposes. It does not represent a final expression of the opinion of the Canada Centre for Mineral and Energy Technology (CANMET)

Ce document est un rapport provisoire non-revisé et rédigé principalement pour fin de discussion et de documentation interne. Il ne représente nullement l'opinion définitive du Centre canadien de la technologie des minéraux et de l'énergie (CANMET)

MICROMEDIA

MICROMEDIA

89-06214/

SAP3D DOCUMENT – A 3-D LINEAR ELASTIC FINITE ELEMENT PROGRAM (CRAY-1S VERSION)

by

N.A. Toews*, Y.S. Yu*, and A.S. Wong**

ABSTRACT

SAP3D (Structural Analysis Program in 3 Dimensions) is a static, linear elastic finite element (F.E.) program for the analysis of 3-dimensional (3-D) structures using the finite element technique. The *SAP3D* program is based on previous work of E.L. Wilson [1], and has been extensively modified at the Mining Research Laboratories to meet our requirements.

To improve its efficiency, a number of modifications including a mesh-generating system, mining step sequences and a new equation solver were

The CRAY-1S version of the *SAP3D* program was further modified from [4]. To run *SAP3D* on the CRAY-1S supercomputer at Dorval, Quebec, the following modifications were made:

(a) Word addressable files;
(b) Split two very large files (the stiffness matrix and reduced stiffness matrix) into ten subfiles each;
(c) Assigning scratch files internally;
(d) Optimization of the *SAP3D* equation solver.

All the changes as mentioned above have been described in detail in [4]. Limited bench mark testing indicates that the speed up time on CRAY-1S is about 25:1 as compared to CYBER 840. Therefore, for a large 3-D mine model, say 30,000 equations, the use of *SAP3D* will be very cost-effective and efficient.

Key Words: 3-dimensional, finite element, structure, plot, mining, supercomputer

* Research Scientists, ** Physical Scientist, Mining Research Laboratories, CANMET, Energy, Mines and Resources Canada, Ottawa.

SAP3D, UN PROGRAMME Á ÈLÉMENTS FINIS LINÉAIRES ÉLASTIQUES TRIDIMENSIONNELS (VERSION CRAY-1S)

par

N.A. Toews*, Y.S. Yu* et A.S. Wong**

RÉSUMÉ

Le SAP3D (Structural Analysis Program in 3 Dimensions, c.-à-d. programme d'analyse structurale tridimensionnelle) est un programme statique à éléments finis (E.F.) linéaires élastiques utilisé pour l'analyse de structures tridimensionnelles (3-D) par la méthode des éléments finis. Il est basé sur les travaux antérieurs de E.L. Wilson [1], et il a été largement modifié aux Laboratoires de recherche minière en vue de répondre à nos exigences.

Afin de l'améliorer, nous lui avons apporté certaines modifications, notamment un système de production de mailles, des séquences d'étapes d'exploitation minière et un nouveau résolveur d'équations [2,3].

La version CRAY-1S du programme SAP3D a été modifiée davantage à partir de [4]. Afin de pouvoir exécuter le SAP3D sur le super-ordinateur CRAY-1S de Dorval (Québec), nous avons apporté les modifications suivantes:

a) fichiers adressables par mot;
b) séparation de deux fichiers volumineux (matrice de rigidité et matrice de rigidité réduite) en dix sousfichiers chacun;
c) attribution de fichiers de travail internes;
d) optimisation du résolveur d'équations du SAP3D.

Toutes les modifications susmentionnées ont été décrites en détail dans [4]. Les essais limités d'évaluation des performances indiquent que la vitesse d'exécution sur le CRAY-1S est environ 25 fois plus grande que sur le CYBER 840. Par conséquent, pour l'étude d'un gros modèle de mine 3-D, comprenant par exemple 30 000 équations, l'utilisation du SAP3D est très rentable et efficace.

Mots-clés: tridimensionnelle, élément finis, structure, graphique, exploitation minière, super-ordinateur

* Chercheurs scientifiques, ** Chercheurs en sciences physiques, Laboratories de recherche minière, CANMET, Énergie, Mines et Ressources Canada, Ottawa.

CONTENTS

	Page
ABSTRACT	i
RÉSUMÉ	ii
1.0 INTRODUCTION	1
2.0 COMPUTER MEMORY REQUIREMENTS	2
3.0 INITIAL STRESSES COEFFICIENTS	3
4.0 SAP3D SYSTEM UNITS AND SIGN CONVENTION	3
5.0 FILE USAGE	4
6.0 SAP3D INPUT DATA INSTRUCTIONS	5
7.0 SAP3D OUTPUT FILES	11
8.0 EXECUTING SAP3D ON CRAY-1S	16
9.0 SAP3D EXAMPLE	18
10.0 REFERENCES	22

FIGURES

No.		
1.	Sign Convention for Stresses	3
2.	CRAY-1S Job Control Cards to Creates and Save SAP3D Object Files	16
3.	Job Control Cards Needed to Execute SAP3D on CRAY-1S	17
4.	Job Control Cards Needed to Execute MRL3DPLT on CRAY-1S	18
5.	Partial SAPIN Input Data for SAP3D Example	19
6.	Selected Portion of SAP3D Example Displacement Output Data	20
7.	Selected Portion of SAP3D Example Stress Output Data	21

TABLES

1.	SAP3D File Usage	4
2.	SAP3D Data Input Instruction	5
3.	Contents of SAPOUT File	12

1.0 INTRODUCTION

SAP3D (Structural Analysis Program in 3 Dimensions) is a static, linear elastic finite element program for 3-dimensional (3–D) analysis of solid structures using the finite element technique. The program is based on the original work of E.L. Wilson [1]; it has been extensively modified at the Mining Research Laboratories to meet our particular requirements [2,3].

The mathematical details of the solid, 3–D finite element are described in [1] and will not be discussed here. The finite element used in *SAP3D* is defined by 8 nodes. Each node has 3 degree of freedom, namely, displacements in the X, Y and Z directions. The 3–D model to be analysed is divided into as many cuboidal elements and as many different material types as desired. There is no restriction on element shape, but the use of regular shape elements (*i.e.*, generally oblong) will lead to greater accuracy in the results and to shorter analysis times. The material properties used in this program are considered to be elastic and isotropic (*i.e.*, one value of modulus, Poisson's ratio and a weight density of material). Uniformly distributed load, point load and gravity load may be considered.

In late 1987, EMR's Computer Science Service made arrangement, so that their users could access the CRAY–1S supercomputer at Dorval at very favourable charge rates. The Mining Research Laboratories (MRL) has always felt restricted, in running even a moderately large 3–dimensional finite element *SAP3D* model on the CYBER because of the cost involved. It was therefore decided to convert the CYBER 730 [3] version of *SAP3D* to the CRAY–1S [4].

The four areas of major modifications to the original version of *SAP3D* with respect to the CRAY-1S version are the following:

(1) Implementation of CRAY–1S machine–dependent word–addressable files.

(2) Assigning scratch files internally.

(3) Optimization of the *SAP3D* equation solver (SESOL).

(4) The CRAY–1S at Dorval computing center has restricted the largest file that any user can allocate and use. The *SAP3D* creates 2 very large files: the stiffness matrix file produced at the assembly stage, and the reduced stiffness matrix file produced at the solution stage. These files exceeded the file limitation (18.9×10^6 words) even for moderately large (say 25000 equations) *SAP3D* problems. The logic of the CRAY–1S version of *SAP3D* has been modified so as to split these two large files into 10 subfiles each.

Output (SAPLST) from the program includes nodal point displacements and stress components (6) for each element. The SAPOUT file, which includes nodal points, elements, displacements and stresses information, can be saved for future model stability analysis and for graphical representation.

2.0 COMPUTER MEMORY REQUIREMENTS

The maximum central memory of the present CRAY–1S supercomputer is 600000 words (decimal). The *SAP3D* default blank common storage 'A' is set to 210000 words.

The following three lines that can be altered, 'A' array, are listed as follows:

```
PARAMETER (MAXA = 210000)
COMMON A(MAXA))
MTOT = MAXA
```

3.0 INITIAL STRESSES COEFFICIENTS

The initial stresses or far field stresses are assumed to vary linearly in the Z direction and are defined as follows:

$$
\begin{aligned}
\sigma_X &= A_X + B_X \times Z \\
\sigma_Y &= A_Y + B_Y \times Z \\
\sigma_Z &= A_Z + B_Z \times Z \\
\tau_{XY} &= A_{XY} + B_{XY} \times Z \\
\tau_{YZ} &= A_{YZ} + B_{YZ} \times Z \\
\tau_{XZ} &= A_{XZ} + B_{XZ} \times Z
\end{aligned}
$$

where σ_X, σ_Y and σ_Z are the normal stress, respectively, in the X, Y and Z directions. τ_{XY}, τ_{YZ} and τ_{XZ} are the shear stress in the XY, YZ and XZ planes respectively (Figure 1). The definition of the *SAP3D* axis is also shown in Figure 1. The A_X, B_X, A_Y, B_Y, A_Z, B_Z,..... *etc.* are the coefficients related to the initial stresses with depth.

4.0 *SAP3D* SYSTEM OF UNITS AND SIGN CONVENTIONS

SAP3D will accept any consistent set of units, *e.g.*, if coordinates are given in meters, Young's moduli in kPa (kilopascal), stresses in kPa and weight density in kPa/m or KN/m^3 then *SAP3D* will provide as output displacements in meters and stresses in kPa.

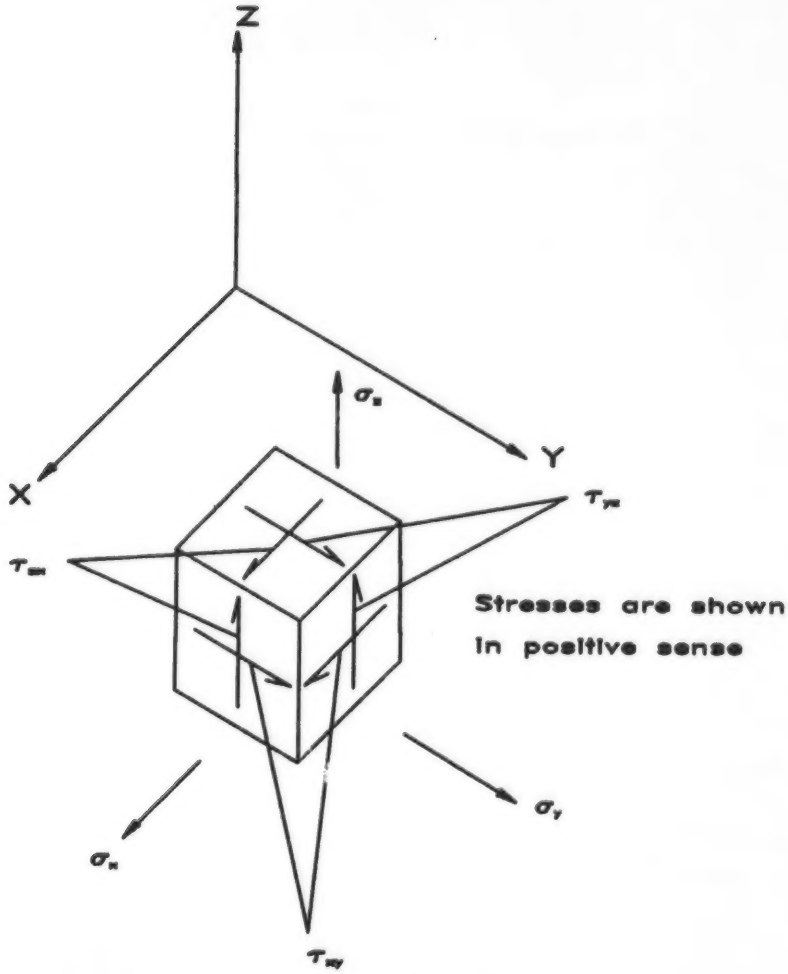

Figure 1. Sign convention for stresses.

The continuum mechanics sign convention (tensile stress positive and compressive stress negative) is used in *SAP3D*. However, in mine applications it is convenient if compressive stresses are indicated as positive. To achieve this, all stresses including shear stresses are reversed in sign during the post–processing (MRL3DPLT) stage.

5.0 FILE USAGE

Twelve files are used in *SAP3D* as listed in Table 1.

Logical File Name	Fortran Alias	Description
LNSTRS	1	Stress matrix file (scratch)
LNNODL	3	Nodal load file (scratch)
SAPIN	5	*SAP3D* input data file
SAPLST	6	*SAP3D* print–output file
LNTEM1	7	(scratch)
LNID	8	(scratch)
SAPOUT	10	*SAP3D* save file
LNDISP	11	(scratch)
LUNEL	18	(scratch)
LUNBF	19	(scratch)
LNSTF	40 – 49	Total stiffness matrix (scratch)
LNRED	50 – 59	Reduced stiffness matrix (scratch)

Table 1. *SAP3D* File Usage.

6.0 *SAP3D* INPUT DATA INSTRUCTIONS

The input data required by *SAP3D* are divided into 8 groups, namely:

(a) Problem Identification and Control Information

(b) Nodal Points Data

(c) Initial Stress Coefficients

(d) Material Properties

(e) Element Distributed Load Data

(f) Gravity Load Factor or Axial Acceleration Data

(g) Elements Data

(h) Concentrated Nodal Point Load Data.

The detail input data for *SAP3D* is described in the following Tables 2a to 2f:

Table 2a

Group (a) – Problem Identification and Control Data:		
Variable(s)	Variable Definition or Description	Format
Record No. 1 – Problem title information:		
HEAD	80 characters problem title information.	A80
Record No. 2 – Control Parameter Data:		
NUMNP	Total number of non-deleted nodal points.	I5
NUMEL	Total number of non-deleted elements.	I5
NMAT	Number of different materials.	I5
NPRNT(1)	A print indicator. If non-zero printing is performed (applies to NPRNT(1), NPRNT(2) AND NPRNT(3)). NPRNT(1) controls printing of input data.	I5
NPRNT(2)	NPRNT(2) controls printing of displacement output.	I5
NPRNT(3)	NPRNT(3) controls printing of stress output.	I5
NSLOD	Number of surface load sets.	I5
NPROB	The total number of subproblems. Default is 1.	I5
NRES	Initial stress indicator. If non-zero initial stress coefficients are required to input.	I5
Remarks:		

Table 2b

Group (b) – Nodal Point Input Data:

Each non-generated nodal point has a record associated with it as follows:

Variable(s)	Variable Definition or Description	Format
Record No. 1 - Nodal point data: a total of 'NUMNP' records to follow:		
N	Nodal point number.	I5
ID(N,1)	X constraint indicator: a zero displacement in X direction is indicated if this indicator is non-zero.	I5
ID(N,2)	Y constraint indicator: a zero displacement in the Y direction is indicated if this indicator is non-zero.	I5
ID(N,3)	Z constraint indicator: a zero displacement in the Z direction is indicated if this indicator is non-zero.	I5
Y(N)	X co-ordinate of node N.	E15.7
Y(N)	Y co-ordinate of node N.	E15.7
Z(N)	Z co-ordinate of node N.	E15.7
KN	Node generate parameter.	I5

Remarks:

Table 2c

Group (c) – Initial Stress Coefficients:
If NRES is non-zero, the initial stresses need to be specified.
Otherwise, proceed to Group (d).

Variable(s)	Variable Definition or Description	Format
Record No. 1 – 12 initial stress coefficients:		
AX	Coefficient.	E15.7
BX	Coefficient.	E15.7
AY	Coefficient.	E15.7
BY	Coefficient.	E15.7
AZ	Coefficient.	E15.7
BZ	Coefficient.	E15.7
AXY	Coefficient.	E15.7
BXY	Coefficient.	E15.7
AYZ	Coefficient.	E15.7
BYZ	Coefficient.	E15.7
AXZ	Coefficient.	E15.7
BXZ	Coefficient.	E15.7

Remarks: Where AX, BX, AY, BY, AZ, BZ, . . . etc. are the coefficients defining the initial stresses as described in the previous section. They are assumed to vary linearly in the direction of Z and defined by the following equations:

$$\sigma_X = AX + BX \times Z$$
$$\sigma_Y = AY + BY \times Z$$
$$\sigma_Z = AZ + BZ \times Z$$
$$\sigma_{XY} = AXY + BXY \times Z$$
$$\sigma_{YZ} = AYZ + BYZ \times Z$$
$$\sigma_{XZ} = AXZ + BXZ \times Z$$

Table 2d

Group (d) – Material Properties Data:		
Variable(s)	**Variable Definition or Description**	**Format**
Record No. 1: Data defining material properties.		
N	Material identification number.	I5
E(N)	Young's modulus of deformation.	E15.7
RNU(N)	Poisson's ratio.	E15.7
WHT(N)	Weight density of this material.	E15.7
Group (e) – Element Distributed Load (Optional†): If NSLOD not equal to zero, then NSLOD records to follow.		
Record No. 1: Data defining element distributed load.		
LSNUM	Load set number.	I5
LODTYP(N)	Element distributed load type: If LODTYP = 1, signifies a uniformly distributed load. If LODTYP = 2, signifies a hydrostatically varying load.	I5
SIZLOD(N)	Element distributed load size: If LODTYP = 1, SIZLOD is load size of the uniformly load. If LODTYP = 2, SIZLOD is the weight density of the fluid.	F10.2
YCOORD(N)	The Y–coordinate of the fluid surface only when LODTYP = 1.	F10.2
LMLOAD	Element face number on which surface load acts.	I5
Remarks:	†: If NSLOD = 0, proceed to Group (f).	

Table 2e

Group (f) – Gravity Load Factors or Axial Acceleration Data:		
Variable(s)	Variable Definition or Description	Format
Record No. 1 – Gravity load factor data:		
XLF	Gravity load factor in the global X–direction.	F10.0
YLF	Gravity load factor in the global Y–direction.	F10.0
ZLF	Gravity load factor in the global Z–direction.	F10.0
Group (g) – Elements data:		
Record No. 1 – Elements data:		
INEL	Element number.	I5
INP(1)	one of the eight nodal point defining the element.	I5
INP(2)	one of the eight nodal point defining the element.	I5
INP(3)	one of the eight nodal point defining the element.	I5
INP(4)	one of the eight nodal point defining the element.	I5
INP(5)	one of the eight nodal point defining the element.	I5
INP(6)	one of the eight nodal point defining the element.	I5
INP(7)	one of the eight nodal point defining the element.	I5
INP(8)	one of the eight nodal point defining the element.	I5
NCUTN	Cut number.	I5
NTGRAT	Gaussian integration order (Default: NTGRAT = 2).	I5
IMAT	Material number.	I5
IINC	Increment for element generation.	I5
MMLD	Surface load set associated with element.	I5
ISP	Two code numbers for stress output.	I5
Remarks:		

Table 2f

Group (h) – Concentrated Nodal Point Load Data:		
Variable(s)	Variable Definition or Description	Format
Record No. 1 – Nodal Load Data:		
NODNUM	The nodal Point number.	I5
XLOAD	X–component of load.	F10.4
YLOAD	Y–component of load.	F10.4
ZLOAD	Z–component of load.	F10.4
Remarks:		

7.0 *SAP3D* OUTPUT FILES

Printer output files includes input data such as problem identification, control parameters, material properties, initial stresses, nodal point coordinates and element connectivity, etc., wich will be printed out if specified. Displacements and stresses of each subproblem may or may not be be printed depending on print control parameters.

Save File – SAPOUT facilitates graphical representation of stresses and displacements or the carrying out a stability analysis based on the stresses determined from the model. For this purpose certain data is written onto a disk file and saved for latter processing. There are a total of $(2 + 2 \times \text{NPROB})$ files to be written on this save file. The logical name is SAPOUT and its contents are described in the following tables 3a, 3b, 3c and 3d.

Table 3a

Contents of SAPOUT File:
(a) Sub–file # 1 – Nodal Coordinate Data:
A. Header:
One record header – Format (1H ,3I10,A80). Contents of header are NC, NC1, NUMNP, HED. NC = 0. NC1 = 1. NUMNP = Number of non–deleted nodal points. HED = 80 character *SAP3D* problem title.
B. NUNNP Records of Nodal Points Coordinates:
Format (1H , 3E15.7). The contents of coordinates are X(I), Y(I), Z(I). X(I) = X–coordinate of nodal point I. Y(I) = Y–coordinate of nodal point I. Z(I) = Z–coordinate of nodal point I.
Remarks: Continued over the following page.

Table 3b

Contents of SAPOUT File:
(b) Sub-file # 2 – Element Data:
A. Header:
One record header – Format (1H ,3I10, A80). Contents of header are NC, NC1, NUMEL, HED. NC = 0. NC1 = 2. NUMEL = Total number of non-deleted elements. HED = 80 character *SAP3D* problem title.
B. NUMEL Records of Elements:
Format (1H , 11I10). Contents of the element records are NEL, (NP(I),i=1,8), MAT, NCUT. NEL = Element number. NP(1) = One of the 8 nodal point array that defined the element. NP(2) = One of the 8 nodal point array that defined the element. NP(3) = One of the 8 nodal point array that defined the element. NP(4) = One of the 8 nodal point array that defined the element. NP(5) = One of the 8 nodal point array that defined the element. NP(6) = One of the 8 nodal point array that defined the element. NP(7) = One of the 8 nodal point array that defined the element. NP(8) = One of the 8 nodal point array that defined the element. MAT = Element material property number. NCUT = Element cut number.
Remarks: Continued over the following page.

Table 3c

Contents of SAPOUT File:
The above data is followed by 2 × NPROB files, *i.e.*, for each subproblem (1 to NPROB) there is associated one file containing the nodal displacements and a second file containing element stresses.
(c) Sub–file # (2J − 1) – Nodal Displacement Data of subproblem J:
A. Header:
One record header – Format (1H ,3I10, A80). Contents of header are NC, NC1, NNP, HED. NC = J (the subproblem number). NC1 = 1. NNP = Total number of non–deleted nodal points. HED = 80 character *SAP3D* problem title.
B. NNP Non–deleted Nodal Displacement Records:
The nodal point's associated displacements are stored in reverse order, *i.e.*, the non-deleted nodal point with the largest nodal point number occurs first and the non-deleted nodal point with smallest nodal number occurs last. Format (1H ,4I10,18A4,2X). The contents of the record are I, UX, UY, UZ. I = Nodal point number. UX = X–displacement of nodal point I. UY = Y–displacement of nodal point I. UZ = Z–displacement of nodal point I.
Remarks: continued over the following page.

Table 3d

Contents of SAPOUT File:
(d) Sub–file #J – Element Stresses Data of subproblem J:
A. Header :
One record header – Format (1H ,3I10, A80). Contents of header are NC, NC1, NUME, HED. NC = J (the subproblem number). NC1 = 2. NNP = Total number of non–deleted elements. HED = 80 character *SAP3D* problem title.
B. NUME Non–deleted Element Stresses Records:
Format (1H ,I5,3E15.7 / 1X,I5,9E15.7). The contents of element stresses are NEL, XC, YC, ZC, LL, (SIG(I),I=1,9). NEL = The non–deleted element number. XC = The X–coordinate of the element centroid. YC = The Y–coordinate of the element centroid. ZC = The Z–coordinate of the element centroid. LL = The load case. SIG(1) = σ_X. SIG(2) = σ_Y. SIG(3) = σ_Z. SIG(4) = σ_{XY}. SIG(5) = σ_{YZ}. SIG(6) = σ_{XZ}. SIG(7) = S1 (Major principal stress). SIG(8) = S2 (Minor principal stress). SIG(9) = S3 (Intermediate principal stress).
Remarks:

8.0 EXECUTING *SAP3D* ON CRAY-1S

Three separate stages are involved in executing *SAP3D*:

(1) Pre-processing, data input preparation and mesh verification;

(2) Executing *SAP3D*;

(3) Post-processing on output data for stability analysis.

The pre-processing stage involves executing *GEN3D* for 3-D finite element mesh generation, mesh verification, mesh plot development for visual inspection and generating a complete input data input file (SAPOUT) suitable for *SAP3D*. These stages of executing can be run either on the VAX-11/750 [5] or the CYBER 840 [6]. If *GEN3D* is run on the VAX-11/750, the SAPOUT file is transferred to the CYBER 840 via MRL's local networking system.

In the case of a convertional series of *SAP3D* runs, it is usually advantageous to save the *SAP3D* executable file on the CRAY-1S. Figure 2 indicates the CRAY-1S control cards needed to accomplished this function:

```
JOB,JN=SAP3D,T700,MFL=500000.
ACCOUNT,AC='account number',US='account number',UPW='password'.
* Compile SAP3D: CFT=CRAY-1S Fortran compiler;
* A=abort; P=double precision; L=Listing.
CFT,ON=A,OFF=P,L=0.
* Segment load: SEGLDR=segment loader;
* CMD=global directive to be processed.
SEGLDR,CMD='ABS=SAP3D'.
* Save SAP3D object files: DN=dataset name;
* PDN=permanent dataset name; ID=user ID.
SAVE,DN=SAP3D,PDN=CRAYSAP3D,ID=MRL.
* Exit from CRAY-1S.
EXIT.
* /EOF=CRAY-1S End-of-file record.
/EOF
        SAP3D source program.
/EOF
```

Figure 2. CRAY-1S Job Control Cards to Create and Save *SAP3D* Object Files.

Figure 3 indicates the control cards necessary to execute the *SAP3D* example that used the entire core memory (600000 words) of the CRAY-1S.

```
JOB,JN=SAP3D,T800,MFL=600000.
ACCOUNT,AC='account number',US='account number',UPW='password'.
* Access SAP3D permanent file on CRAY-1S.
ACCESS,DN=SAP3D,PDN=CRAYSAP3D,ID=MRL.
* Access SAP3D input data file (SAPIN);
* (1) Transfer to and stored SAPIN file on CRAY-1S;
* (2) or accompany along the job cards.
ACCESS,DN=SAPIN,PDN='my sapin file name',ID='my id'.
* Assign maximum SAPOUT file size allow on CRAY-1S and Fortran alias.
ASSIGN,DN=SAPOUT,LM=36990,A=FT10.
* Print SAP3D run statistics on CRAY-1S.
OPTION,STAT=ON.
* Execute SAP3D.
SAP3D.
* Save SAPOUT file
SAVE,DN=SAPOUT,PDN='sapout file name',ID='my id'.
* Save SAPLST output file;
* SAPLST will be transferred back to CYBER 840 and printed.
SAVE,DN=SAPLST,PDN='saplst output name',ID='my id'.
* EXIT from CRAY-1S.
EXIT.
* /EOF=CRAY-1S End-of-file record.
/EOF
```

Figure 3. Job Control Cards Needed to Execute *SAP3D* on CRAY-1S.

In this report only the program that related to CRAY-1S will be discussed. Figure 4 indicates the job control cards needed to execute *MRL3DPLT* [7,8] which creating the data files required for program *MRLPLT* [9].

```
JOB,JN=SAP3D,T600,MFL=500000.
ACCOUNT,AC='account number',US='account number',UPW='password'.
* Access MRL3DPLT permanent file on CRAY-1S.
ACCESS,DN=MRL3DP,PDN=MRL3DPLT,ID=MRL.
* Access SAPOUT permanent file on CRAY-1S.
ACCESS,DN=SAPOUT,PDN='my sapout name',ID='my id'.
* Execute MRL3DPLT.
MRL3DP.
* Save MRL3DPLT files
SAVE,DN=PLTBND,PDN='my boundary file name',ID='my id'.
SAVE,DN=PLTin ,PDN='my data point file name',ID='my id'.
SAVE,DN=PLTCMD,PDN='my plot command file name',ID='my id'.
* EXIT from CRAY-1S.
EXIT.
* /EOF=CRAY-1S End-of-file record.
/EOF
```

Figure 4. Job Control Cards Needed to Execute *MRL3DPLT* on CRAY-1S.

9.0 *SAP3D* EXAMPLE

The *SAP3D* example described below has also been used in [5]. Figure 5 shows partial SAPIN input data for the *SAP3D* example generated by executing *GEN3D*. Figure 6 and 7 shows a selected portion of *SAP3D* output file with respect to displacements and stresses data.

```
SAP3D EXAMPLE  -  3-D MODEL SIMULATION
6084 5000    3    1    1    1    0    1    1
   1    1    1    1  0.0000000E+00  0.0000000E+00  0.0000000E+00    0
  10    1    0    1  0.0000000E+00  0.3976000E+02  0.0000000E+00    0
  19    1    0    1  0.0000000E+00  0.7184000E+02  0.0000000E+00    0
  28    1    0    1  0.0000000E+00  0.9624001E+02  0.0000000E+00    0
  37    1    0    1  0.0000000E+00  0.1129600E+03  0.0000000E+00    0
  46    1    0    1  0.0000000E+00  0.1220000E+03  0.0000000E+00    0
  55    1    0    1  0.0000000E+00  0.1340000E+03  0.0000000E+00    0
  64    1    0    1  0.0000000E+00  0.1460000E+03  0.0000000E+00    0
  73    1    0    1  0.0000000E+00  0.1580000E+03  0.0000000E+00    0
  82    1    0    1  0.0000000E+00  0.1700000E+03  0.0000000E+00    0
  91    1    0    1  0.0000000E+00  0.1787500E+03  0.0000000E+00    0
 100    1    0    1  0.0000000E+00  0.1875000E+03  0.0000000E+00    0
 ...
....        < nodes 101 to 6056 >
6057    1    0    0  0.1060000E+03  0.2800000E+03  0.3000000E+03    0
6066    1    0    0  0.1060000E+03  0.2880000E+03  0.3000000E+03    0
6075    1    0    0  0.1060000E+03  0.2940000E+03  0.3000000E+03    0
6084    1    1    0  0.1060000E+03  0.3000000E+03  0.3000000E+03    0
-0.1234800E+02  0.4116000E-01
-0.1646400E+02  0.5488000E-01
-0.8232000E+01  0.2744000E-01
 0.0000000E+00  0.0000000E+00
 0.0000000E+00  0.0000000E+00
 0.0000000E+00  0.0000000E+00
   1  0.4000000E+05  0.2500000E+00  0.2744000E-01
   2  0.4000000E+05  0.2500000E+00  0.2744000E-01
   3  0.3000000E+05  0.2500000E+00  0.2744000E-01
   0.0000    0.0000   -1.0000
   1    1   10  244  235    2   11  245  236    2    2    1    0    0    0    0
   2   10   19  253  244   11   20  254  245    2    2    1    0    0    0    0
   3   19   28  262  253   20   29  263  254    2    2    1    0    0    0    0
   4   28   37  271  262   29   38  272  263    2    2    1    0    0    0    0
   5   37   46  280  271   38   47  281  272    2    2    1    0    0    0    0
   6   46   55  289  280   47   56  290  281    2    2    1    0    0    0    0
   7   55   64  298  289   56   65  299  290    2    2    1    0    0    0    0
   8   64   73  307  298   65   74  308  299    2    2    1    0    0    0    0
   9   73   82  316  307   74   83  317  308    2    2    1    0    0    0    0
  10   82   91  325  316   83   92  326  317    2    2    1    0    0    0    0
  11   91  100  334  325   92  101  335  326    2    2    1    0    0    0    0
  12  100  109  343  334  101  110  344  335    2    2    1    0    0    0    0
  13  109  118  352  343  110  119  353  344    2    2    1    0    0    0    0
  14  118  127  361  352  119  128  362  353    2    2    1    0    0    0    0
  15  127  136  370  361  128  137  371  362    2    2    1    0    0    0    0
  ..
....        < elements 16 to 4996 >
4997 5813 5822 6056 6047 5814 5823 6057 6048    2    2    3    0    0    0    0
4998 5822 5831 6065 6056 5823 5832 6066 6057    2    2    3    0    0    0    0
4999 5831 5840 6074 6065 5832 5841 6075 6066    2    2    3    0    0    0    0
5000 5840 5849 6083 6074 5841 5850 6084 6075    2    2    3    0    0    0    0
   0
```

Figure 5. Partial SAPIN Input Data of *SAP3D* Example.

NODE DISPLACEMENTS

NODE	X	Y	Z
6084	0.000E+00	0.000E+00	2.100E-05
6083	-2.891E-05	0.000E+00	1.395E-05
6082	-5.894E-05	0.000E+00	-1.062E-05
6081	-7.785E-05	0.000E+00	-3.858E-05
6080	-9.299E-05	0.000E+00	-7.374E-05
6079	-1.080E-04	0.000E+00	-1.349E-04
6078	-1.120E-04	0.000E+00	-2.455E-04
6077	-7.583E-05	0.000E+00	-3.978E-04
6076	0.000E+00	0.000E+00	-4.674E-04
6075	0.000E+00	2.207E-05	2.675E-05
6074	-2.883E-05	2.212E-05	1.914E-05
6073	-5.878E-05	2.152E-05	-7.190E-06
6072	-7.769E-05	2.075E-05	-3.744E-05
6071	-9.277E-05	2.022E-05	-7.432E-05
6070	-1.077E-04	1.935E-05	-1.356E-04
6069	-1.117E-04	1.770E-05	-2.461E-04
6068	-7.565E-05	1.542E-05	-3.985E-04
6067	0.000E+00	1.441E-05	-4.681E-04
6066	0.000E+00	4.162E-05	1.587E-05
6065	-2.868E-05	4.198E-05	8.535E-06
6064	-5.861E-05	4.184E-05	-1.383E-05
6063	-7.763E-05	4.114E-05	-3.978E-05
6062	-9.318E-05	4.026E-05	-7.717E-05
6061	-1.070E-04	3.858E-05	-1.379E-04
6060	-1.110E-04	3.539E-05	-2.481E-04
6059	-7.510E-05	3.098E-05	-4.004E-04
6058	0.000E+00	2.901E-05	-4.701E-04
6057	0.000E+00	7.018E-05	1.440E-05
6056	-2.761E-05	7.013E-05	5.154E-06
6055	-5.713E-05	6.917E-05	-1.839E-05
6054	-7.642E-05	6.783E-05	-4.420E-05
6053	-9.061E-05	6.642E-05	-8.308E-05
6052	-1.052E-04	6.387E-05	-1.432E-04
6051	-1.092E-04	5.899E-05	-2.529E-04
6050	-7.380E-05	5.218E-05	-4.051E-04
6049	0.000E+00	4.910E-05	-4.746E-04
6048	0.000E+00	9.658E-05	4.508E-06
6047	-2.690E-05	9.606E-05	-4.574E-06
6046	-5.569E-05	9.499E-05	-2.765E-05
6045	-7.450E-05	9.387E-05	-5.304E-05
6044	-8.833E-05	9.210E-05	-9.150E-05
6043	-1.026E-04	8.881E-05	-1.510E-04
6042	-1.065E-04	8.274E-05	-2.601E-04
6041	-7.186E-05	7.417E-05	-4.117E-04
6040	0.000E+00	7.024E-05	-4.810E-04
6039	0.000E+00	1.235E-04	-1.138E-05
6038	-2.652E-05	1.227E-04	-1.844E-05
6037	-5.425E-05	1.210E-04	-4.021E-05
6036	-7.190E-05	1.194E-04	-6.568E-05
6035	-8.543E-05	1.173E-04	-1.020E-04
....			
....			

Figure 6. Selected Portion of *SAP3D* Example Displacements Output Data.

8-NODE SOLID ELEMENT STRESSES

ELEMENT	FACE	SIG-XX	SIG-YY	SIG-ZZ	SIG-XY	SIG-YZ	SIG-ZX	SIG-MAX
1	0	-1.1695E+01	-1.5535E+01	-7.7685E+00	-2.1842E-04	2.6050E-03	2.8234E-05	-7.7685E+00
2	0	-1.1696E+01	-1.5545E+01	-7.7604E+00	-6.7582E-04	7.2783E-03	-1.2649E-05	-7.7604E+00
3	0	-1.1698E+01	-1.5560E+01	-7.7486E+00	-1.1072E-03	1.0736E-02	-1.1866E-04	-7.7486E+00
4	0	-1.1700E+01	-1.5575E+01	-7.7372E+00	-1.4068E-03	1.2896E-02	-2.7143E-04	-7.7372E+00
5	0	-1.1702E+01	-1.5585E+01	-7.7291E+00	-1.5461E-03	1.3972E-02	-4.0561E-04	-7.7290E+00
6	0	-1.1703E+01	-1.5595E+01	-7.7219E+00	-1.6058E-03	1.4618E-02	-5.3465E-04	-7.7218E+00
7	0	-1.1705E+01	-1.5606E+01	-7.7133E+00	-1.6059E-03	1.5028E-02	-6.8629E-04	-7.7133E+00
8	0	-1.1706E+01	-1.5617E+01	-7.7047E+00	-1.5270E-03	1.5016E-03	-8.3026E-04	-7.7046E+00
9	0	-1.1708E+01	-1.5628E+01	-7.6961E+00	-1.3732E-03	1.4521E-02	-9.5352E-04	-7.6961E+00
10	0	-1.1709E+01	-1.5637E+01	-7.6890E+00	-1.1904E-03	1.3689E-02	-1.0383E-03	-7.6890E+00
11	0	-1.1710E+01	-1.5645E+01	-7.6835E+00	-1.0080E-03	1.2706E-02	-1.0887E-03	-7.6835E+00
12	0	-1.1710E+01	-1.5651E+01	-7.6784E+00	-8.1105E-04	1.1505E-02	-1.1208E-03	-7.6784E+00
13	0	-1.1711E+01	-1.5657E+01	-7.6740E+00	-6.0979E-04	1.0138E-02	-1.1357E-03	-7.6740E+00
14	0	-1.1712E+01	-1.5663E+01	-7.6702E+00	-4.1476E-04	8.6696E-03	-1.1352E-03	-7.6702E+00
15	0	-1.1712E+01	-1.5667E+01	-7.6671E+00	-2.3573E-04	7.1752E-03	-1.1219E-03	-7.6671E+00
16	0	-1.1713E+01	-1.5671E+01	-7.6647E+00	-8.0872E-05	5.7287E-03	-1.0991E-03	-7.6647E+00
17	0	-1.1713E+01	-1.5674E+01	-7.6629E+00	4.3752E-05	4.3963E-03	-1.0698E-03	-7.6629E+00
18	0	-1.1713E+01	-1.5676E+01	-7.6617E+00	1.3135E-04	3.2746E-03	-1.0381E-03	-7.6617E+00
19	0	-1.1713E+01	-1.5677E+01	-7.6610E+00	1.8476E-04	2.3708E-03	-1.0064E-03	-7.6610E+00
20	0	-1.1714E+01	-1.5678E+01	-7.6606E+00	2.0896E-04	1.6399E-03	-9.7471E-04	-7.6606E+00
21	0	-1.1714E+01	-1.5679E+01	-7.6604E+00	2.0569E-04	1.0768E-03	-9.4496E-04	-7.6604E+00
22	0	-1.1714E+01	-1.5679E+01	-7.6603E+00	1.7809E-04	6.6312E-04	-9.1905E-04	-7.6603E+00
23	0	-1.1714E+01	-1.5680E+01	-7.6603E+00	1.3066E-04	3.7031E-04	-8.9888E-04	-7.6603E+00
24	0	-1.1714E+01	-1.5680E+01	-7.6603E+00	7.7352E-05	1.8531E-04	-8.8678E-04	-7.6603E+00
25	0	-1.1714E+01	-1.5680E+01	-7.6604E+00	2.6303E-05	5.8659E-05	-8.8185E-04	-7.6603E+00
26	0	-1.0541E+01	-1.3989E+01	-7.0071E+00	-1.6469E-04	7.4167E-03	1.2846E-04	-7.0071E+00
27	0	-1.0542E+01	-1.3999E+01	-6.9990E+00	-5.3203E-04	2.0949E-02	1.0643E-04	-6.9989E+00
28	0	-1.0543E+01	-1.4015E+01	-6.9864E+00	-9.1709E-04	3.1393E-02	-2.1787E-05	-6.9863E+00
29	0	-1.0545E+01	-1.4031E+01	-6.9737E+00	-1.1994E-03	3.8272E-02	-2.5503E-04	-6.9735E+00
30	0	-1.0546E+01	-1.4042E+01	-6.9642E+00	-1.3200E-03	4.1887E-02	-4.7486E-04	-6.9639E+00
..								
..								

Figure 7. Selected Portion of SAP3D Example Stresses Output Data.

10.0 REFERENCES

1. Wilson, E.L.; Solid SAP – A static analysis program for three dimensional solid structures; University of California at Berkeley, U.S.A.; Report UC SESM 71–19; 1971.

2. Sage, R. and Toews, N.A.; User manual for SAP3D; Internal Report 74–60; Mining Research Centre, Mines Branch, Energy, Mines & Resources Canada; Ottawa; April 1974.

3. Toews, N.A., Yu, Y.S. and Granz, R.; Document of GEN3D – (A 3–D mesh generating program for SAP3D); Report MRP/MRL 75–89 (TR); Mining research Laboratories, CANMET, Energy, Mines & Resources Canada; December 1975.

4. Toews, N.A. and Wong, A.S.; Conversion of SAP3D from CYBER 730 to CRAY–1S; Report MRL 88-36 (INT); Mining Research Laboratories, CANMET, Energy, Mines & Resources Canada; April 1988.

5. Toews, N.A. Yu, Y.S. and Wong, A.S.; GEN3D user's guide – A 3–D mesh generating program for SAP3D (VAX–11/750 version); Report MRL 88–103 (TR), Mining Research Laboratories, CANMET, Energy, Mines & Resources Canada; December 1989.

6. Calow, G.; *SAP3D* on NOS/VE – user's guide (draft); User service; Computer Service Centre; Energy, Mines & Resources Canada; August 1987.

7. Walden, W.E.; Documentation of two SAP3D post processor; Report MRP/MRL 76–8 (TR); Mining Research Laboratories, CANMET, Energy, Mines & Resources Canada; January 1976.

8. Yu, Y.S., Wong, A.S. and Toews N.A.; MRL3DPLT documentation – An interface program for the general purpose program MRLPLT (CRAY–1S version); Mining Research Laboratories, CANMET, Energy, Mines & Resources Canada; April 1989.

9. Yu, Y.S., Toews, N.A., Wong, A.S. and Morrison, H.D.; MRLPLT user's guide – A general purpose program for graphical representation of data over 2–D regions (VAX–11/750 version); Divisional Report MRL 88–97 (TR); Mining Research Laboratories, CANMET, Energy, Mines & Resources Canada; August 1988.